PTR BALER & COMPACTOR

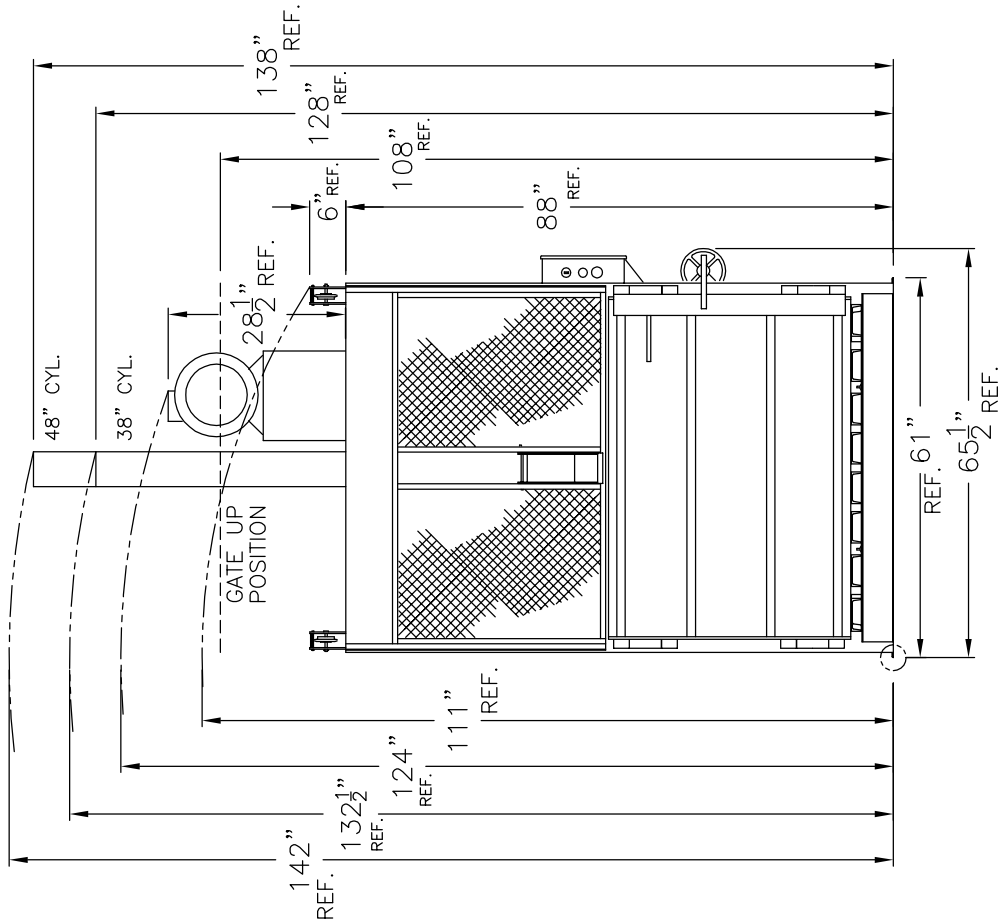

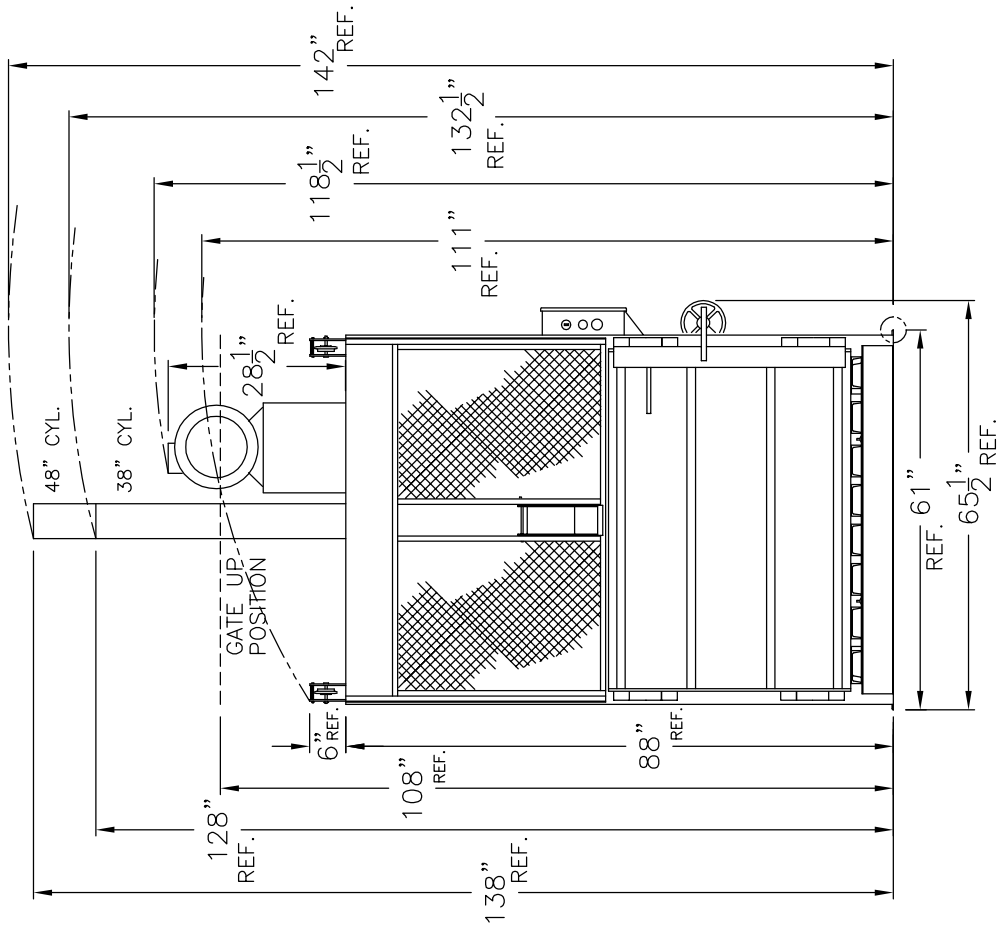

NOT TO SCALE

TITLE: 1800HD CEILING HEIGHT REQ. FOR TIPPING UPRIGHT AT INSTALL DWG. NO: AB401982